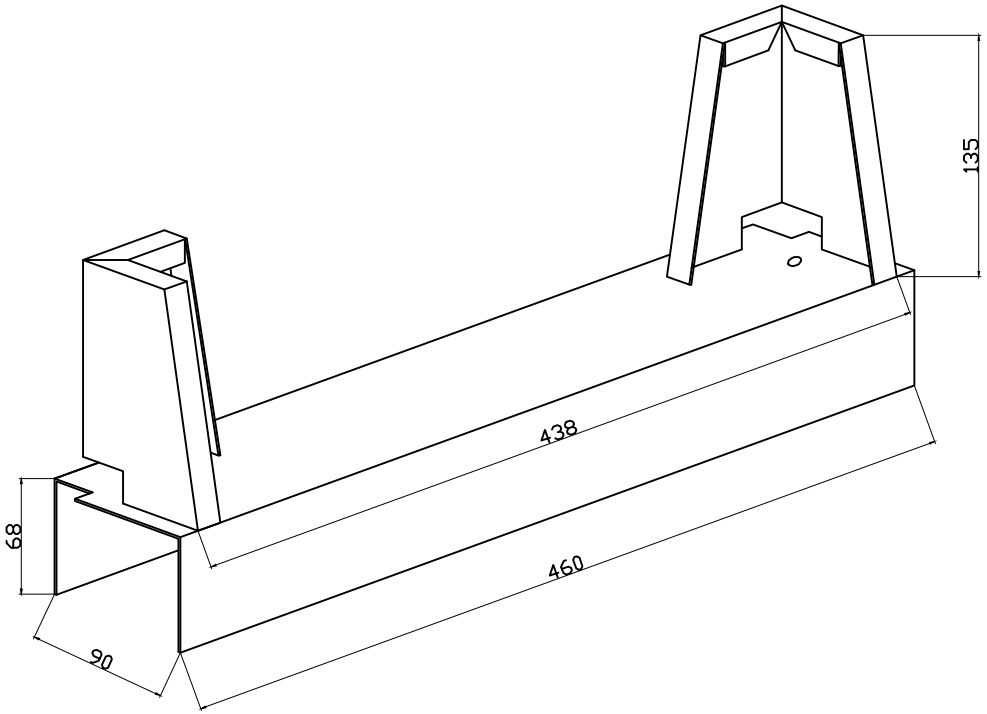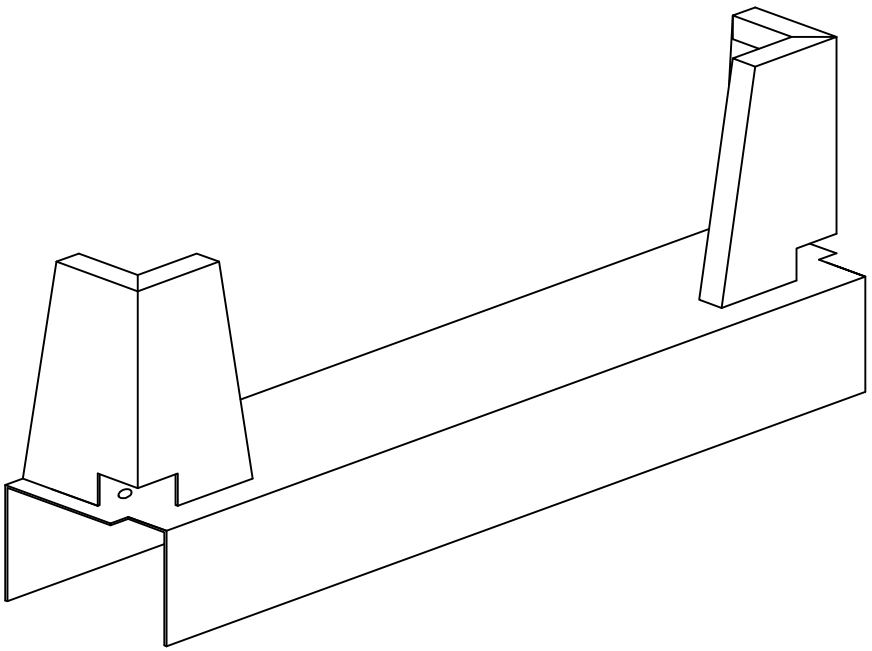FFS